Aston University
BIRMINGHAM UK

EI1EL2
Electronics 2

Audio Amplifier Design - Introduction

Dr Ian Phillips

Your Task

Design and build a two-stage audio amplifier with a filter that takes a signal from a mobile phone or MP3 player and amplifies it to drive an external speaker

Why two-stage?

- A more complex problem
- Connecting output of TL071 filter directly to a speaker would sound very bad due to limited current supply
- A buffer amplifier is required

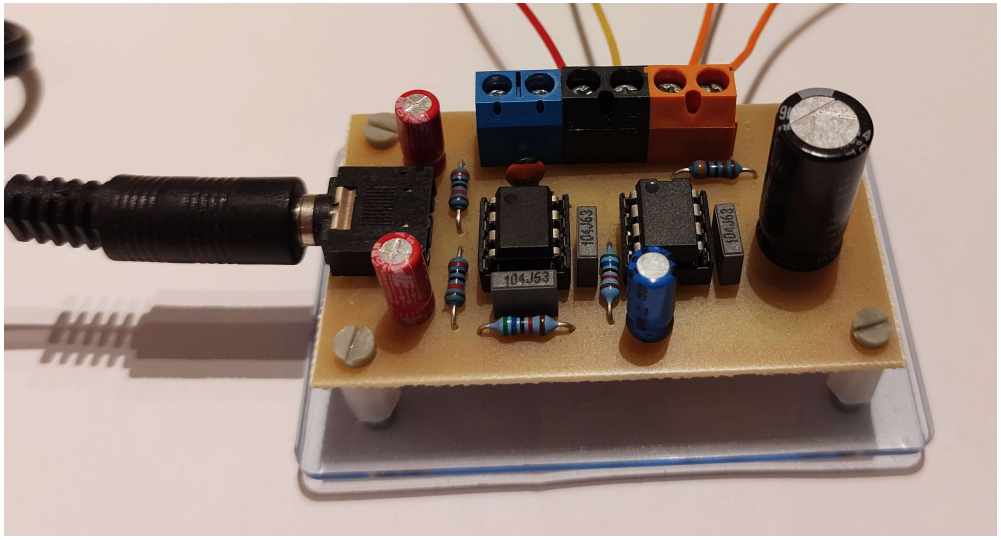

Detailed Design

- Everybody should come up with there own design
- We will recognise two designs the same and you will be penalised for plagiarism
- Talk to each other, that's encouraged
- You will start with slightly different values
- Converge to a very similar design
- We don't won't the exactly same design

Why are we doing this???

- “I expect placement students an graduates to have a good understanding of analogue electronics… e.g. op-amps and transistors” Rolls Royce
- “I expect students to be able to find their own way around a lab and use equipment like function generators and oscilloscopes” UTC Aerospace
- “Students need to be able to record what they have done so that we can use that information at a later date’ IBM
- “I look for interns who are interested in how things work and can build up their own projects” Mattel

Objectives and Learning Outcomes

- When you have finished this project you should be able to:
  - Plan the development of a simple prototype
  - Use Proteus software to design and simulate a circuit and layout a PCB
  - Demonstrate build and test skills for a simple circuit
  - Understand the design and workings of an audio amplifier
  - Write a concise but comprehensive design and test report

Assessment

- A written technical design report (70% of module)
  - Detailed template provided
  - 15 page limit

Top-level system or block diagram

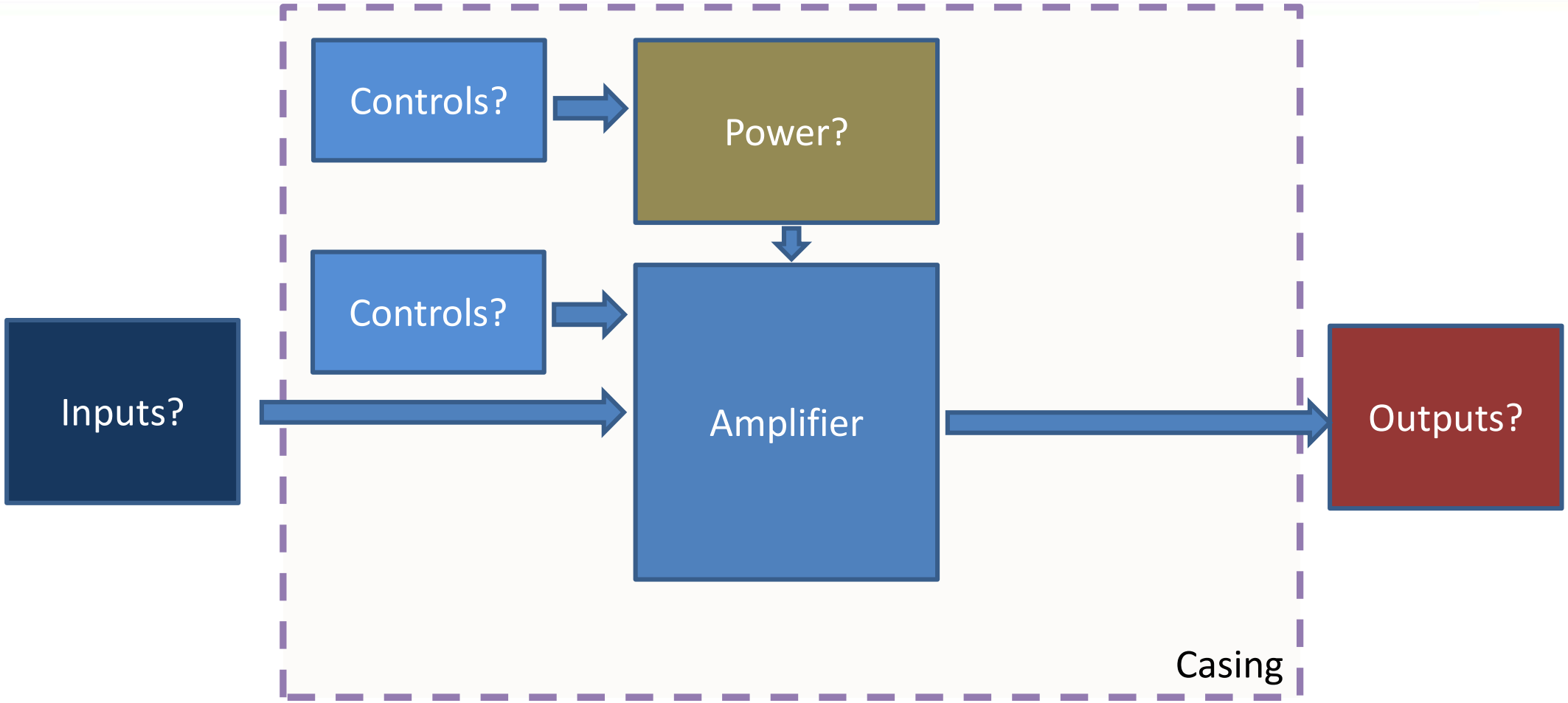

Gain

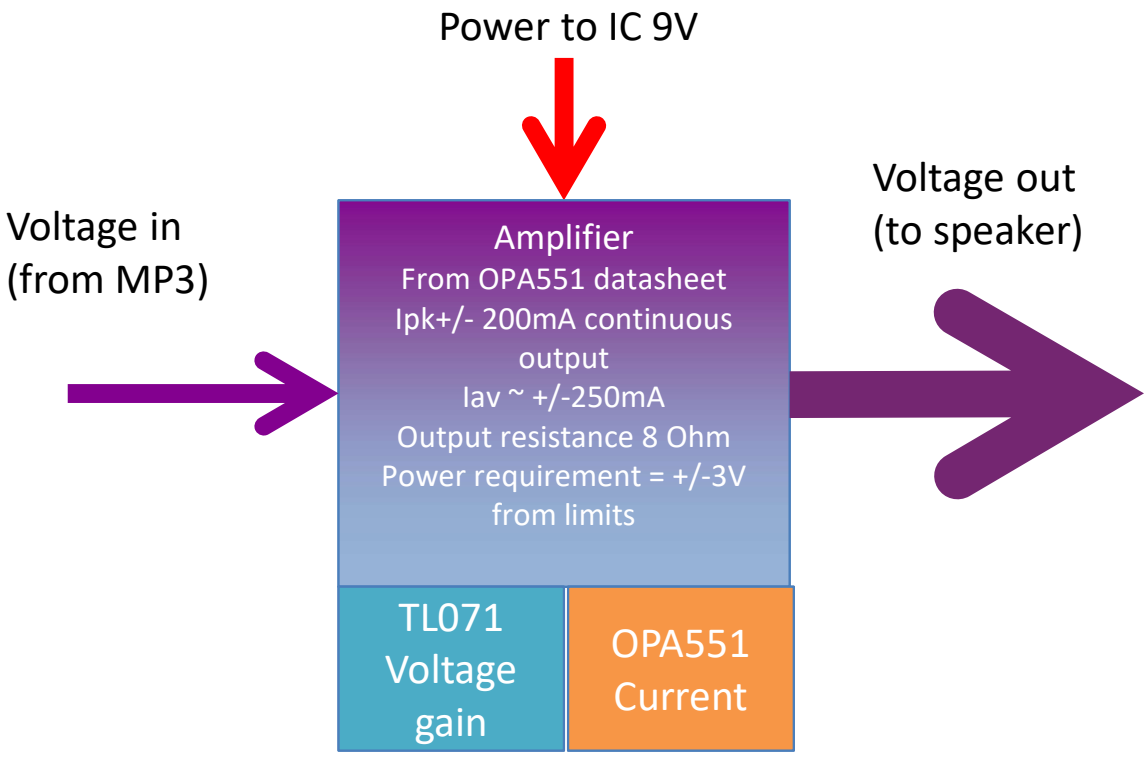

$$\text{Gain} = \frac{\text{Voltage out (to speaker)}}{\text{Voltage in (from Mobile)}}$$

$$= \frac{3}{\text{Voltage in (See specification)}}$$

Limited by OPA551 current

Active Bandpass filter

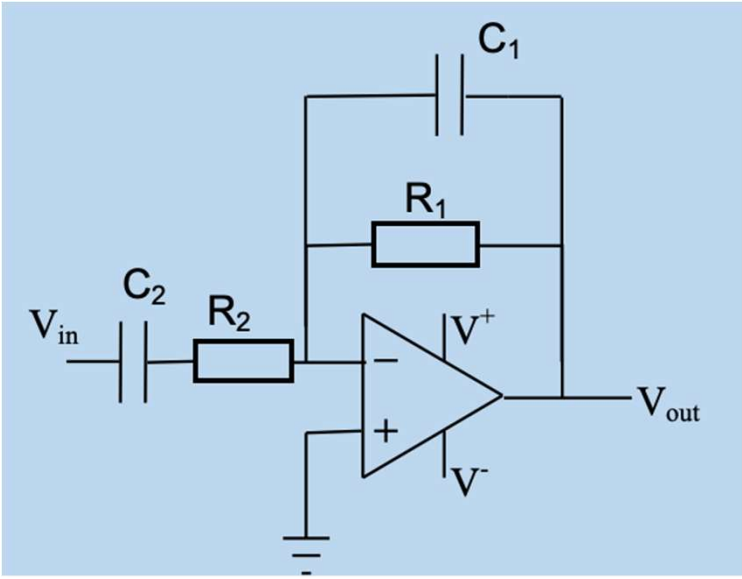

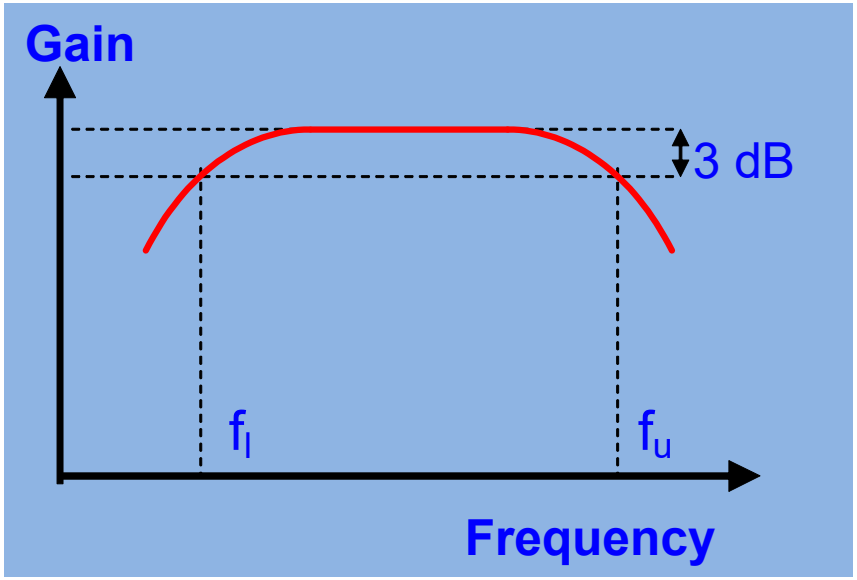

$$\text{Gain} = \frac{V_{out}}{V_{in}} = \frac{R_1}{R_2}$$

Vout = 3, Vin = 0.7*Mb_max

Upper cut-off frequency

- $f_u = 1/(2\pi R_1 C_1)$

Lower cut-off frequency

- $f_l = 1/(2\pi R_2 C_2)$

Design start points

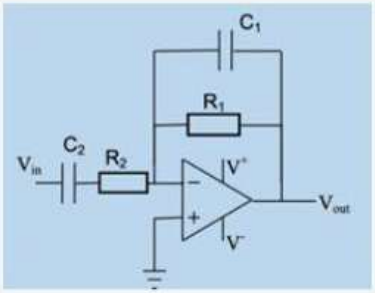

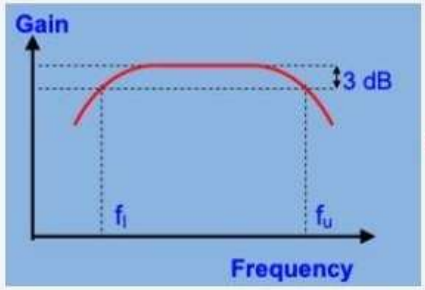

Upper cut-off frequency

$f_u = 1/(2\pi R_1 C_1)$

Lower cut-off frequency

$f_l = 1/(2\pi R_2 C_2)$

$$G(linear) = \frac{R1}{R2}$$

Student ID	Surname	Forname	Input Resister R2 (Ω)	Lower cut-off frequency, fl (Hz)	Feedback R1 (Ω)	Upper cut-off frequency, fu (Hz)
			3900			31000
			8200			25000
				13	62000	
				5	82000	

EI1EL2

Design start points

- Each student has been given two of four parameters
  - This table is located on blackboard
- Ensures unique design
  - Used to guarantee individual assessment
- Using formula in Slides 10 you can calculate other values
- Choose the other Cut-off frequency from the following limits:
  - Lower: 5-15Hz
  - Upper: 22 to 46 kHz

Power-Supply Decoupling

- You might think that the +/-9V supply is fixed and stable, but the supply voltage can vary a little (particularly when drawing high current).
- This can cause feedback, and in some circumstances cause very loud oscillations on the output.
- We fix this issue by using power supply decoupling, where we add a 100nF capacitor to each power supply pin. The other end of the capacitor goes to 0V.
- When you design a PCB, this capacitor must be connected to the IC pin with the shortest possible track.

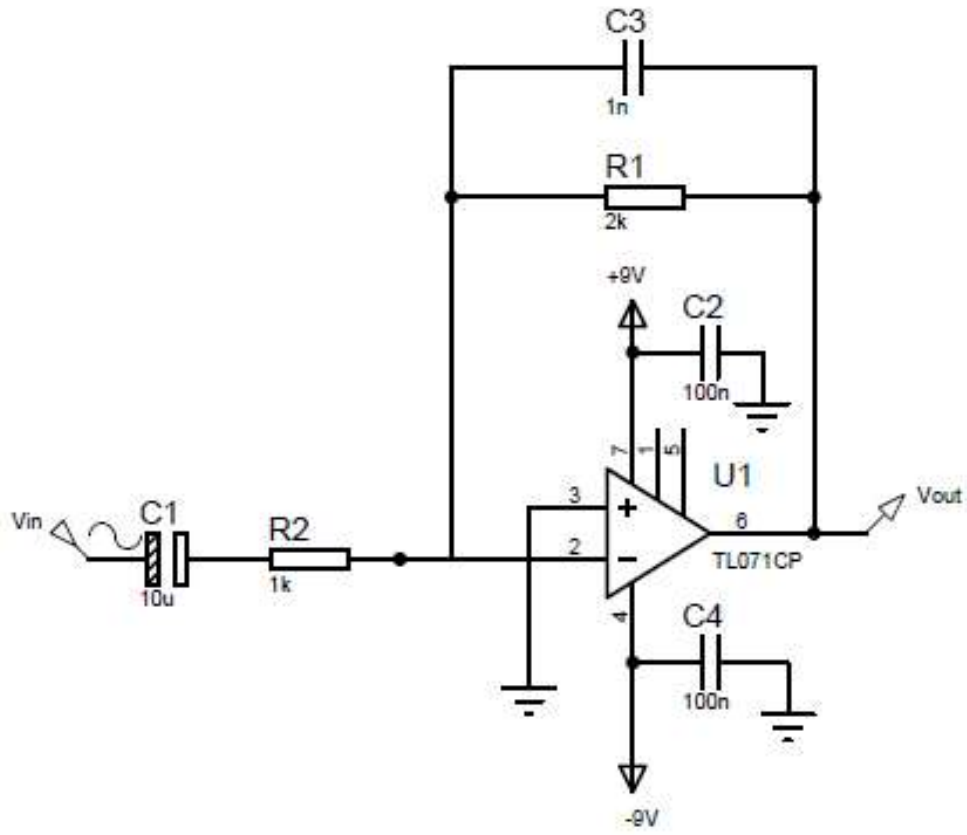

Single power supply operation

- Up until now, we have used +/- 15V to power the amplifier
- The amplifier output will therefore go equally positive and negative
- Approximately +/-13 V for the TL071 with +/-15 supply
- It is not always convenient to have a +/- dual supply, e.g. battery-powered circuit
- There is a separate lecture that outlines single power supply operation next week

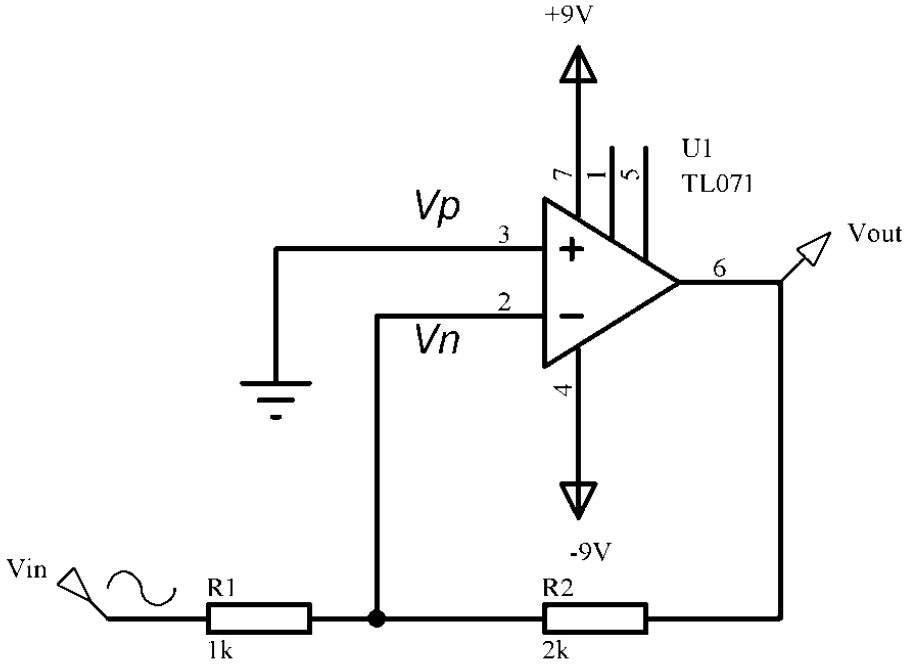

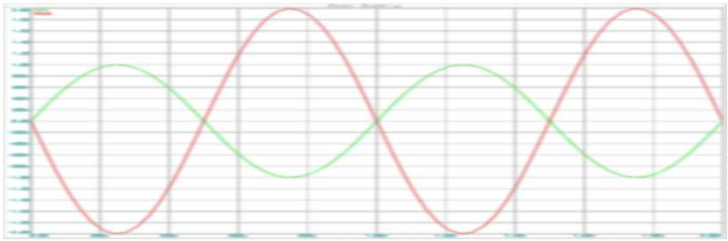

Voltage buffer – Current Amplifier

- Unity Gain buffer amplifier, voltage gain = 1, provides significant current gain
- High input impedance
  - Does not load down source, draws minimal current
- Low output impedance
  - Drives load like perfect voltage source
- OPA551 Provides the current to drive the speaker (8 ohm)
- The Power supply (not shown in figure) will also need decoupling

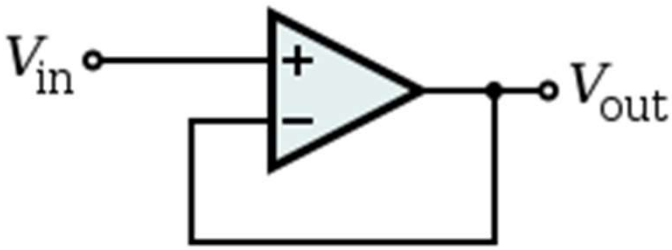

Stereo input – mono amplifier

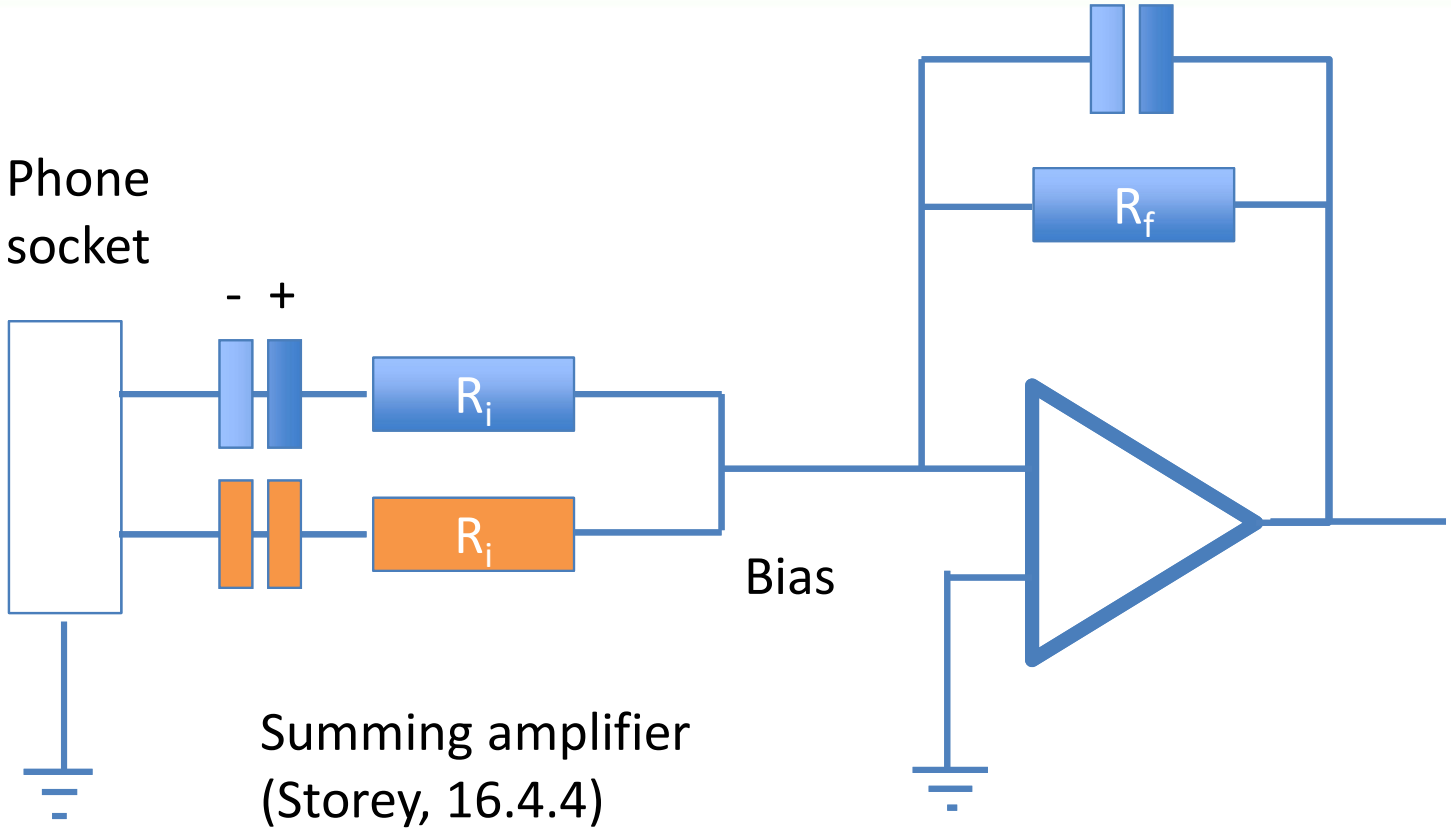

USE EXCEL

- I expect EVERYBODY to use EXCEL
  - This is a key tool and makes your life easier
- Use Tabs, and have a different tab for each measurement stage

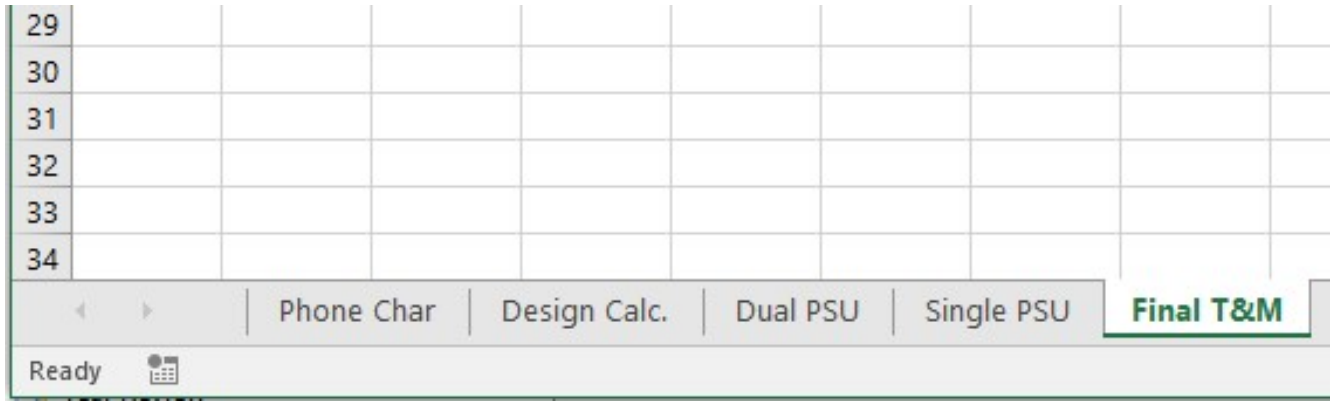

USE EXCEL

- Design Calculation using EXCEL
  - Don’t use your calculator or lab book

Lower cut off frequency		Hz	
Max phone voltage		V	
0.7 Phone Voltage		V	
actual Rf		ohms	
gain		dB	
Ri			
rounded Ri		MF25_2K	ohm
Actual Gain =		dB	
Cl		F	
rounded Cl		F	
Actual Lower cut-off frequency		Hz	
Upper cut off frequency I cant remember why I chose to use 25000 Shalli keep it as this?		Hz	
Cf		F	
rounded Cf		F	
Actual Upper cut-off frequency		Hz	

Plotting Graphs - Incorrectly

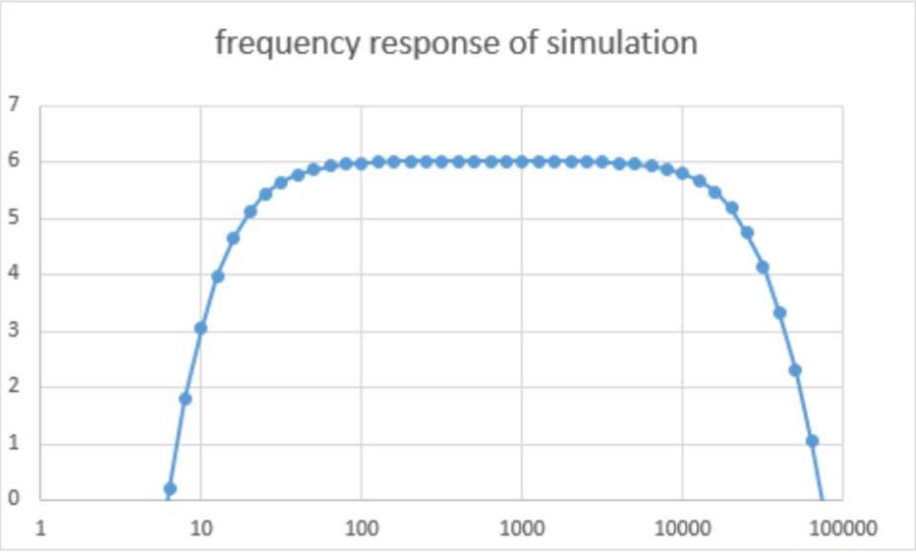

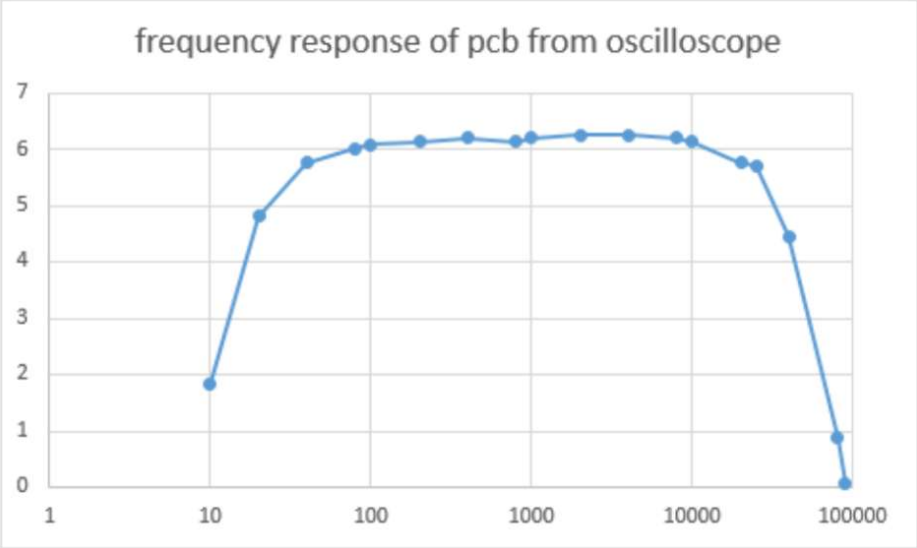

Plotting Graphs - Correctly

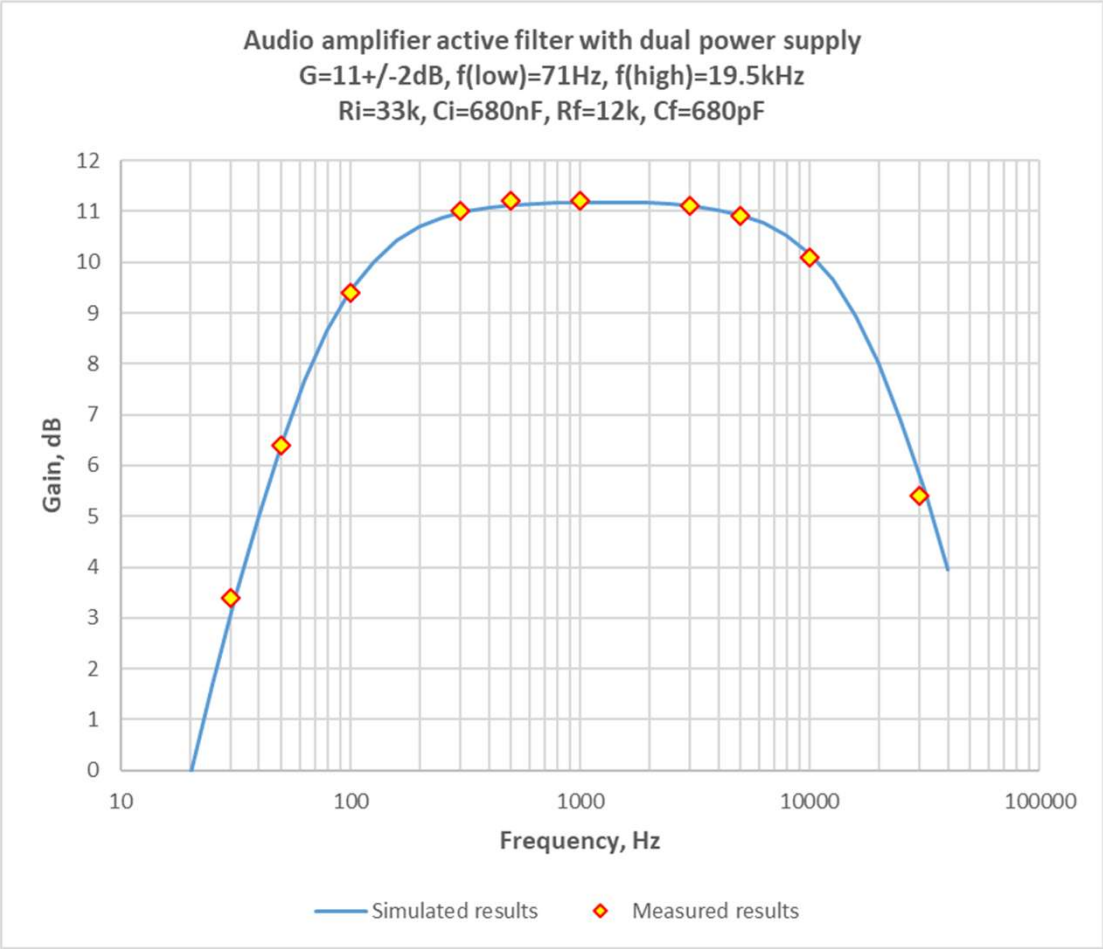

EI1EL2

What next?

- Ensure that you can access Proteus from your home PC
  - Download and install locally
  - AstonApps
  - Aston VDI system

What voltage gain do I require?

- Measure the output voltage from your mobile phone
  - Open the 440Hz sinewave on your phone
  - Connect your phone to the oscilloscope using appropriate connector
  - Measure Vpp vs. volume setting (remember maximize signal on oscilloscope display)
  - Plot in Excel. Vpp vs. volume setting (see next slide)

3.5mm Audio Output

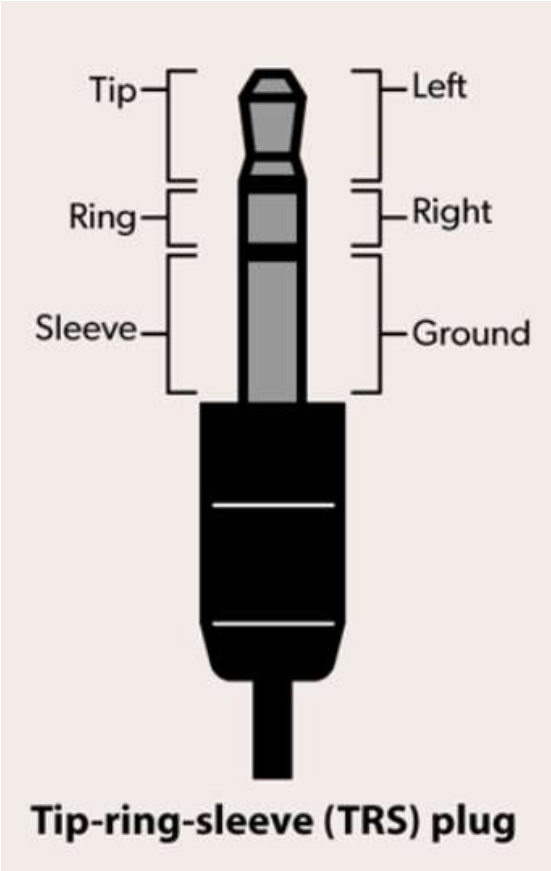

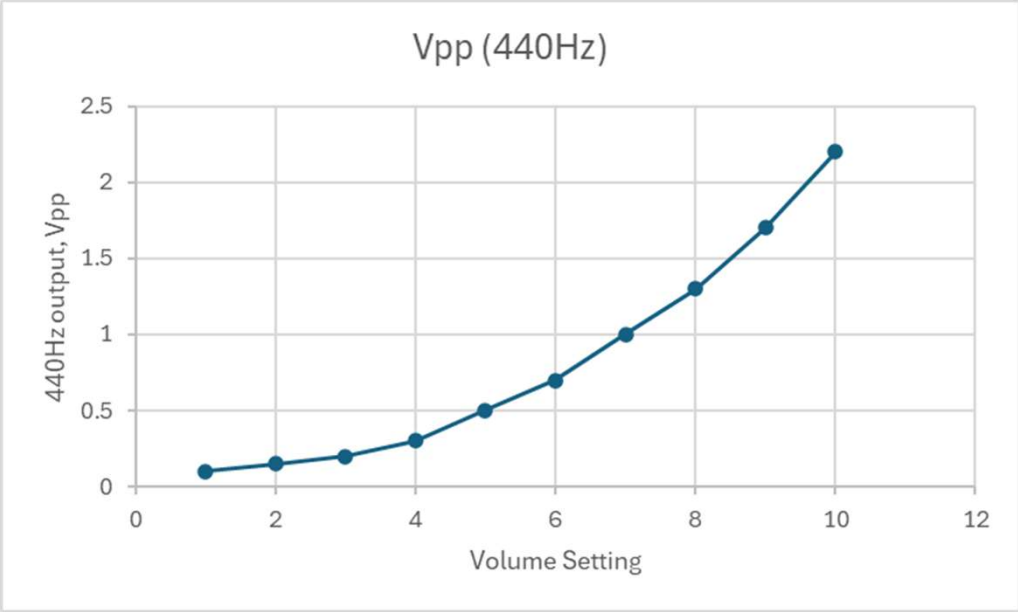

What voltage gain do I require?

- Calculate Target gain
  - Assume input voltage = Mobile Phone max out * 0.7
  - Assume output voltage = $3V_{pp}$.
    - This is limited by the OPA551 Power amplifier (see datasheet)
    - OPA551 worst case specification is you need to operate 3Volts from each supply rail.
- Calculate missing resister value
  - R1 or R2 depending which you were given
- Recalculate gain with available resister
  - Find nearest available resister
  - Calculate the actual gain

Active filter design

- You now know R1, R2, and Actual Gain, G
- You were given one cut-off frequency, either F_{low} or F_{high}
- Choose the other Cut-off frequency from the following limits:
  - Lower: 5-15Hz
  - Upper: 22 to 46 kHz
- Calculate C_1 and C_2 using the formula
- Select the closest capacitor available
- Recalculate actual F_{low} and F_{high}

Upper cut-off frequency

- $f_u = 1/(2\pi R_1 C_1)$

Lower cut-off frequency

- $f_l = 1/(2\pi R_2 C_2)$

Schedule

Wk	Celcat Week	W/c date	Description
3	18	19/01/2026	Mon: Project Introduction, Mobile Phone Measurement, Design Calculations.
			Thur: Dual Power supply simulation and breadboarding
4	19	26/01/2026	Thurs: Single Power Supply simulation and breadboarding
5	20	02/02/2026	Mon: Learn to solder
			Thurs: Two stage design. Completing Schematics
6	21	09/02/2026	Thurs: PCB design
7	22	16/02/2026	Thurs: Final build and Test

Progress tracking and Sign-off

- This is your first individual project - it will need you to plan your time
- To help us track your progress and provide support if needed, we will sign you off after each of the following stages:
  - Mobile Phone characterization
  - Design calculations
  - Simulation using dual power supply
  - Breadboard using a dual power supply
  - Simulation using a single power supply
  - Breadboard using a single power supply
  - Final Schematic check
  - Final PCB Check
  - PCB Soldering Check
  - Final Test and Measurement
  - Final Audio Check using Speaker

Don’t forget!

- Read the project brief document
- Look at the report template
  - Complete this on a weekly basis

Aston University
BIRMINGHAM UK

EI1EL2
Electronics 2

Introduction

Any Questions?

EI1EL2